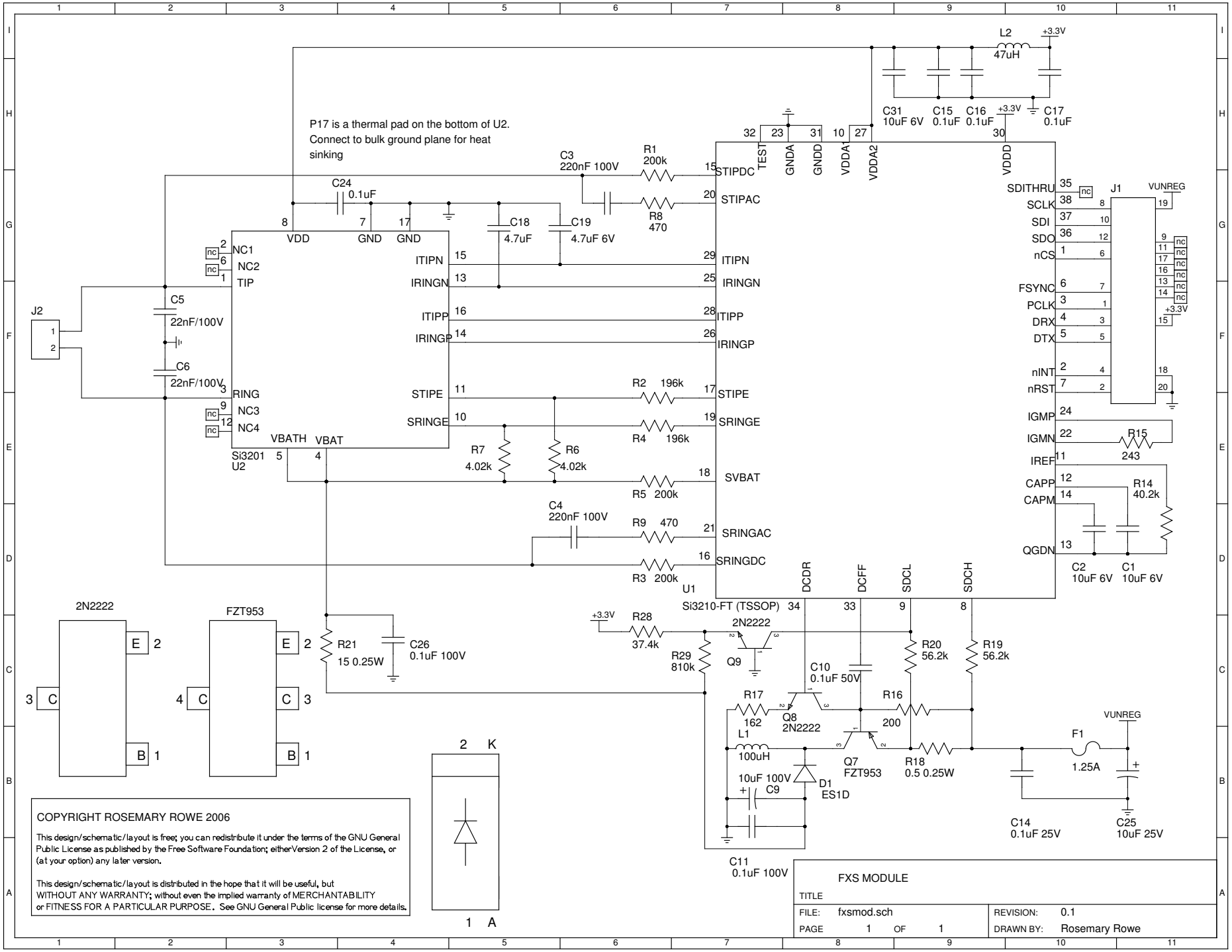
P17 is a thermal pad on the bottom of U2.
Connect to bulk ground plane for heat sinking
Si3201
U2
Si3210-FT (TSSOP)
U1
J1
J2
VUNREG
+3.3V
L2
47uH
C31 10uF 6V
C15 0.1uF
C16 0.1uF
C17 0.1uF
C3 220nF 100V
R1 200k
R8 470
C24 0.1uF
C18 4.7uF
C19 4.7uF 6V
C5 22nF/100V
C6 22nF/100V
R2 196k
R4 196k
R5 200k
R3 200k
R7 4.02k
R6 4.02k
C4 220nF 100V
R9 470
R15 243
R14 40.2k
C2 10uF 6V
C1 10uF 6V
R21 15 0.25W
C26 0.1uF 100V
R28 37.4k
R29 810k
Q9 2N2222
C10 0.1uF 50V
R20 56.2k
R19 56.2k
R17 162
Q8 2N2222
R16 200
L1 100uH
Q7 FZT953
R18 0.5 0.25W
10uF 100V C9
D1 ES1D
C11 0.1uF 100V
F1 1.25A
C14 0.1uF 25V
C25 10uF 25V
2N2222
FZT953
COPYRIGHT ROSEMARY ROWE 2006
This design/schematic/layout is free; you can redistribute it under the terms of the GNU General Public License as published by the Free Software Foundation; eitherVersion 2 of the License, or (at your option) any later version.
This design/schematic/layout is distributed in the hope that it will be useful, but WITHOUT ANY WARRANTY; without even the implied warranty of MERCHANTABILITY or FITNESS FOR A PARTICULAR PURPOSE. See GNU General Public license for more details.
TITLE
FXS MODULE
FILE: fxsmod.sch
PAGE 1 OF 1
REVISION: 0.1
DRAWN BY: Rosemary Rowe